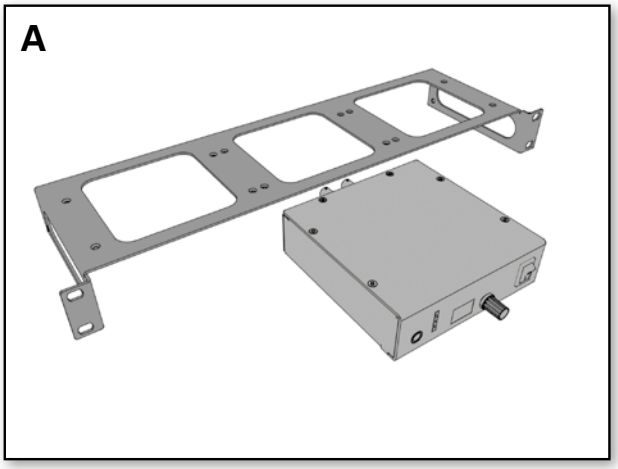
A

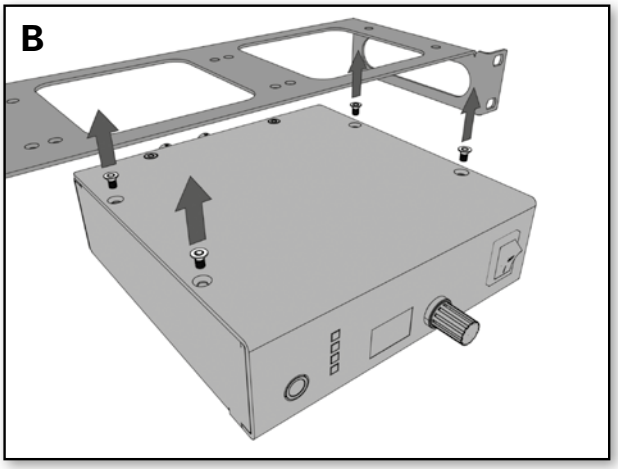
B

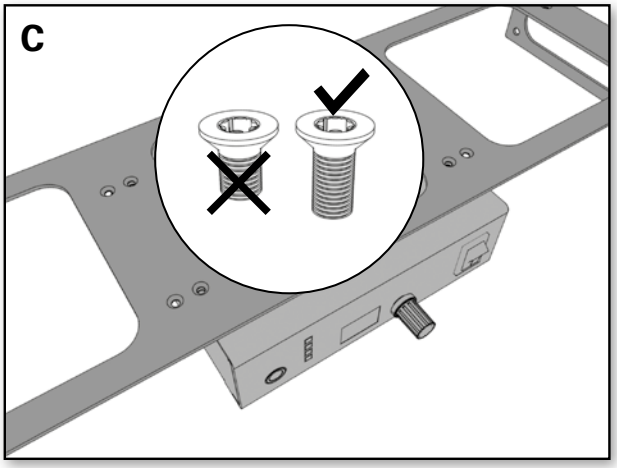
C

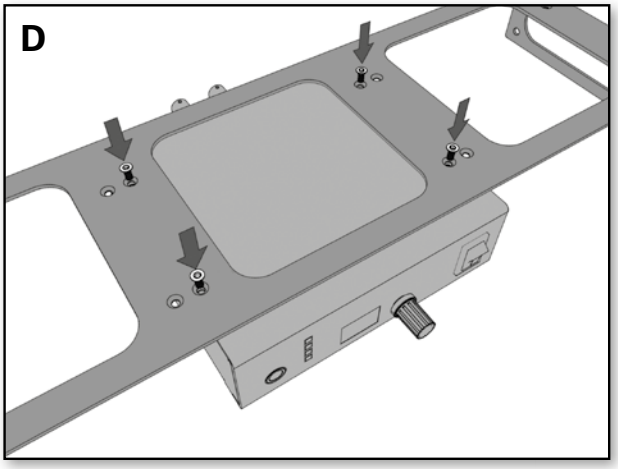
D